REFRIGERATION SYSTEM
SAFETY CONTROL PANEL
WAYNE FARMS
UNION SPRINGS, AL

UNI-TEMP REFRIGERATION PROJECT 3807
RELEASE: 05 - AS INSTALLED

DRAWING INDEX:

RC-1 COVER SHEET/DRAWING INDEX
RC-2 ENCLOSURE LAYOUT
RC-3 CONDUIT PLAN
RC-4 SAFETY CIRCUIT
RC-5 SAFETY CIRCUIT
RC-6 VENTILATION INTERLOCK WIRING
RC-7 AMMONIA MONITORING STATION
RC-8 AMMONIA MONITORING STATION
RC-9

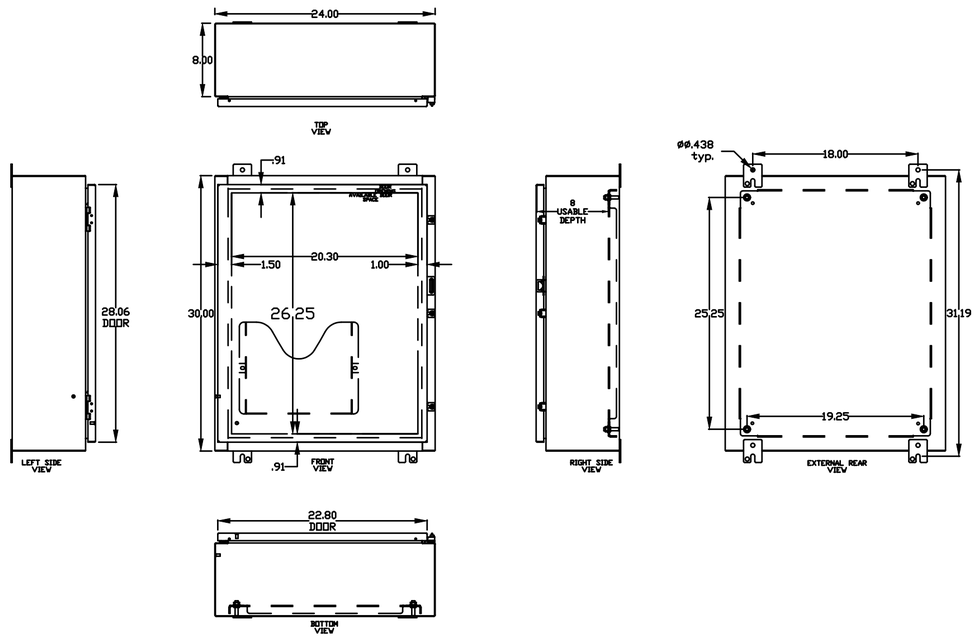

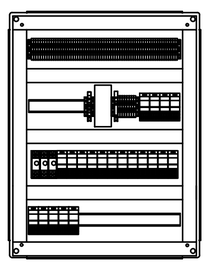

BACK PANEL LAYOUT

ID #	PART NUMBER	DESCRIPTION
1	SCE-30H2408LP	NEMA-12 ENCLOSURE
2	SCE-30P24	BACK PANEL
3		
4	PSSR-VF24	24VDC 5A POWER SUPPLY
5	1492-H4	FUSE HOLDER W/NEON INDICATOR
6	1492-H5	FUSE HOLDER W/LED INDICATOR
7	700-HC24A1-4 / 700-HN104	120VAC RELAY / BASE
8	700-HC24Z24-4 / 700-HN104	24VDC RELAY / BASE
9	700-FS34UE3	OFF DELAY TIMER RELAY
10	700-FS44UE3	ON DELAY TIMER RELAY
11	1492-J4	FEED THRU TERMINAL
12	1492-J4G	2-LEVEL TERMINAL
13	1492-JG4	GROUNDING TERMINALS
14	FLSXSLG6 OR EQUIV	1.5" WIRE DUCT
15		
16		
17		
18		
19		
20		

CAD DWG FILE RC-2.DWG

Uni-Temp
REFRIGERATION, INC.
4483 S. Old Peachtree Rd.
Norcross, GA 30071
Phone: 800.227.3617
Fax : 770.242.9894
www.unitempref.com

Client:

WAYNE FARMS

Project:

REFRIGERATION SYSTEM
SAFETY CONTROL PANEL
WAYNE FARMS
UNION SPRINGS, AL

Rev	Date	By:	Apprv:	Drawing Revision Description:
1	03/12/19	GG		PRELIMINARY - FOR REVIEW ONLY
2	03/19/19	GG		FOR CONSTRUCTION
3	04/10/19	GG		FOR INSTALLATION
4	08/27/19	GG		CORRECTIONS DURING INSTALLATION
5	10/18/19	GG		AS INSTALLED

THIS DOCUMENT CONTAINING PROPRIETY INFORMATION BELONGING TO UNI-TEMP REFRIGERATION INC. OR ITS AFFILIATED COMPANIES AND SHALL BE USED ONLY FOR THE PURPOSE FOR WHICH IT WAS SUPPLIED. IT SHALL NOT BE COPIED, REPRODUCED OR OTHERWISE USED, NOR SUCH INFORMATION BE FURNISHED IN WHOLE OR IN PART TO OTHERS EXCEPT IN ACCORDANCE WITH THE TERMS OF ANY AGREEMENT UNDER WHICH IT WAS SUPPLIED OR WITH PRIOR WRITTEN CONSENT OF UNI-TEMP REFRIGERATION INC. AND SHALL BE RETURNED UPON REQUEST.

Project No.: 3807

Drawn by: G Garrett

Dwg Date: 03/12/19

Prog. Engr.: J Howell

Scale: NONE

Sheet No.: 2 OF 9

Sheet Title: Enclosure Layout

Sheet Name: RC-2

CAD DWG FILE RC-3.DWG

Rev	Date	By:	Apprv:	Drawing Revision Description:
1	03/12/19	GG		PRELIMINARY - FOR REVIEW ONLY
2	03/19/19	GG		FOR CONSTRUCTION
3	04/10/19	GG		FOR INSTALLATION
4	08/27/19	GG		CORRECTIONS DURING INSTALLATION
5	10/18/19	GG		AS INSTALLED

Project:

REFRIGERATION SYSTEM
SAFETY CONTROL PANEL
WAYNE FARMS
UNION SPRINGS, AL

Client:

WAYNE FARMS

Uni-Temp REFRIGERATION, INC.
4487 S. Old Peachtree Rd.
Norcross, GA 30071
Phone: 800.227.3617
Fax : 770.242.9894
www.unitempref.com

THIS DOCUMENT CONTAINING PROPRIETY INFORMATION BELONGING TO UNI-TEMP REFRIGERATION INC. OR ITS AFFILIATED COMPANIES AND SHALL BE USED ONLY FOR THE PURPOSE FOR WHICH IT WAS SUPPLIED. IT SHALL NOT BE COPIED, REPRODUCED OR OTHERWISE USED, NOR SUCH INFORMATION BE FURNISHED IN WHOLE OR IN PART TO OTHERS EXCEPT IN ACCORDANCE WITH THE TERMS OF ANY AGREEMENT UNDER WHICH IT WAS SUPPLIED OR WITH PRIOR WRITTEN CONSENT OF UNI-TEMP REFRIGERATION INC. AND SHALL BE RETURNED UPON REQUEST.

Project No.: 3807
Drawn by: G Garrett
Dwg Date: 03/12/19
Prog. Engr.: J Howell
Scale: NONE
Sheet No.: 3 OF 9
Sheet Title: Conduit Plan
Sheet Name: RC-3

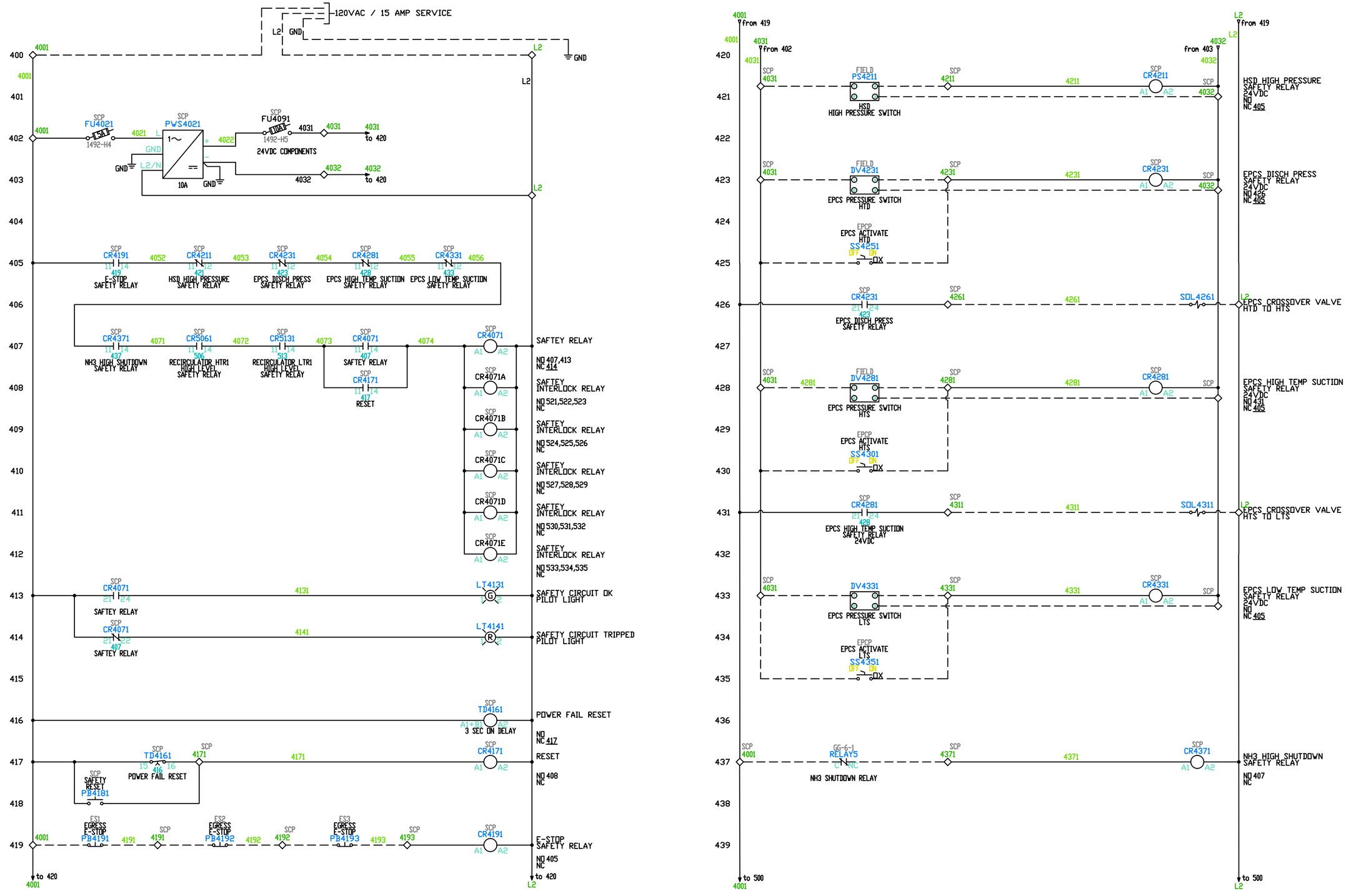

Uni-Temp
4483 S. Old Peachtree Rd.
Norcross, GA 30071
Phone: 800.227.3617
Fax : 770.242.9894
www.unitempref.com

Client: WAYNE FARMS

Project: REFRIGERATION SYSTEM SAFETY CONTROL PANEL
WAYNE FARMS
UNION SPRINGS, AL

Rev	Date	By:	Apprv:	Drawing Revision Description:
1	03/12/19	GG		PRELIMINARY - FOR REVIEW ONLY
2	03/19/19	GG		FOR CONSTRUCTION
3	04/10/19	GG		FOR INSTALLATION
4	08/27/19	GG		CORRECTIONS DURING INSTALLATION
5	10/18/19	GG		AS INSTALLED

THIS DOCUMENT CONTAINING PROPRIETY INFORMATION BELONGING TO UNI-TEMP REFRIGERATION INC. OR ITS AFFILIATED COMPANIES AND SHALL BE USED ONLY FOR THE PURPOSE FOR WHICH IT WAS SUPPLIED. IT SHALL NOT BE COPIED, REPRODUCED OR OTHERWISE USED, NOR SUCH INFORMATION BE FURNISHED IN WHOLE OR IN PART TO OTHERS EXCEPT IN ACCORDANCE WITH THE TERMS OF ANY AGREEMENT UNDER WHICH IT WAS SUPPLIED OR WITH PRIOR WRITTEN CONSENT OF UNI-TEMP REFRIGERATION INC. AND SHALL BE RETURNED UPON REQUEST.

Project No.: 3807
Drawn by: G Garrett
Dwg Date: 03/12/19
Prog. Engr.: J Howell
Scale: NONE
Sheet No.: 4 OF 9
Sheet Title: Safety Circuit
Sheet Name: RC-4

CAD DWG FILE RC-4.DWG

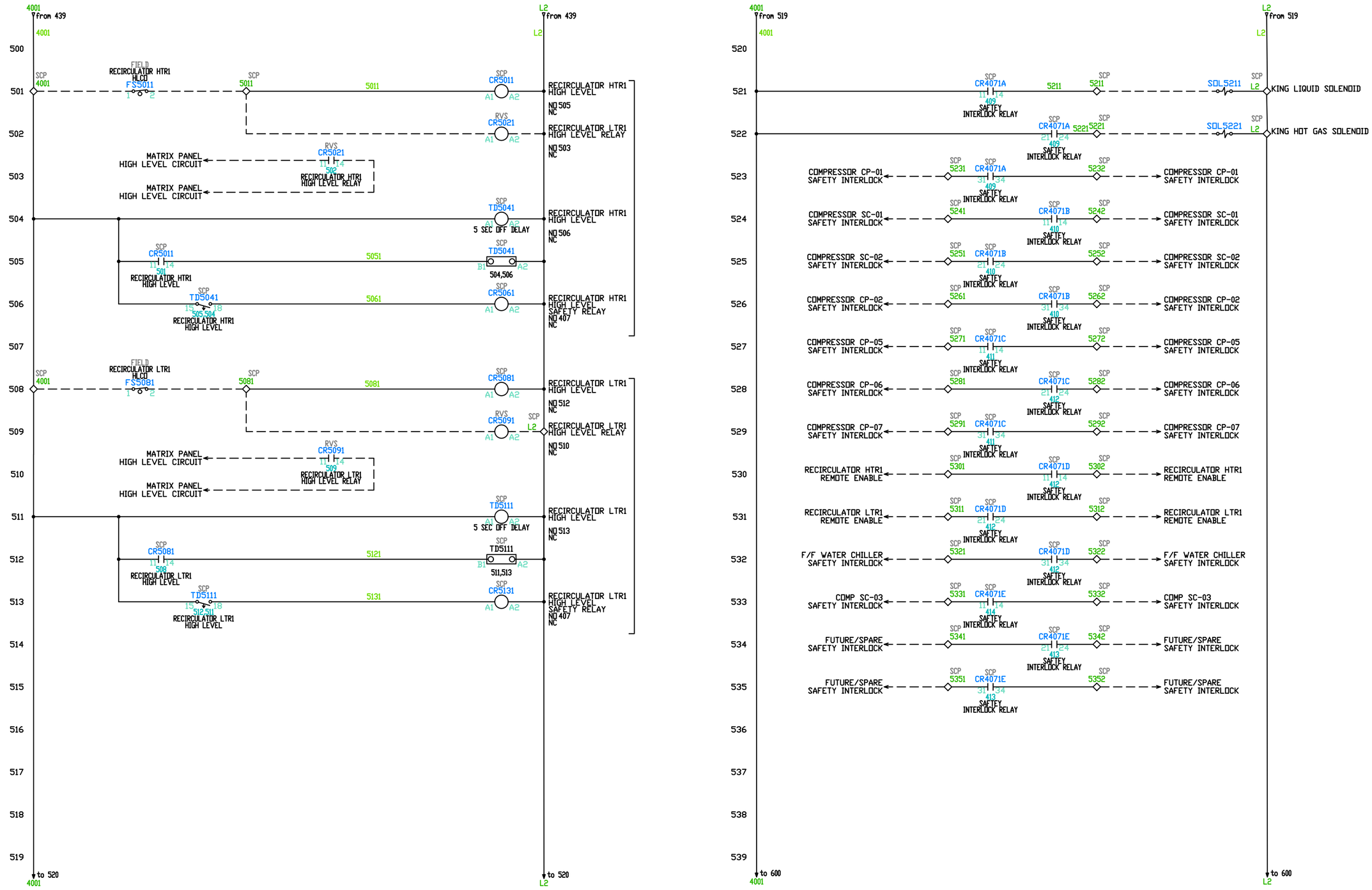

Uni-Temp
4483 S. Old Peachtree Rd.
Norcross, GA 30071
Phone: 800.227.3617
Fax : 770.242.9894
www.unitemprefr.com

Client: WAYNE FARMS

Project: REFRIGERATION SYSTEM SAFETY CONTROL PANEL
WAYNE FARMS
UNION SPRINGS, AL

Rev	Date	By:	Approv:	Drawing Revision Description:
1	03/12/19	GG		PRELIMINARY - FOR REVIEW ONLY
2	03/19/19	GG		FOR CONSTRUCTION
3	04/10/19	GG		FOR INSTALLATION
4	08/27/19	GG		CORRECTIONS DURING INSTALLATION
5	10/18/19	GG		AS INSTALLED

THIS DOCUMENT CONTAINING PROPRIETY INFORMATION BELONGING TO UNI-TEMP REFRIGERATION INC. OR ITS AFFILIATED COMPANIES AND SHALL BE USED ONLY FOR THE PURPOSE FOR WHICH IT WAS SUPPLIED. IT SHALL NOT BE COPIED, REPRODUCED OR OTHERWISE USED, NOR SUCH INFORMATION BE FURNISHED IN WHOLE OR IN PART TO OTHERS EXCEPT IN ACCORDANCE WITH THE TERMS OF ANY AGREEMENT UNDER WHICH IT WAS SUPPLIED OR WITH PRIOR WRITTEN CONSENT OF UNI-TEMP REFRIGERATION INC. AND SHALL BE RETURNED UPON REQUEST.

Project No.: 3807
Drawn by: G Garrett
Dwg Date: 03/12/19
Prog. Engr.: J Howell
Scale: NONE
Sheet No.: 5 OF 9
Sheet Title: Safety Circuit
Sheet Name: RC-5

CAD DWG FILE RC-5.DWG

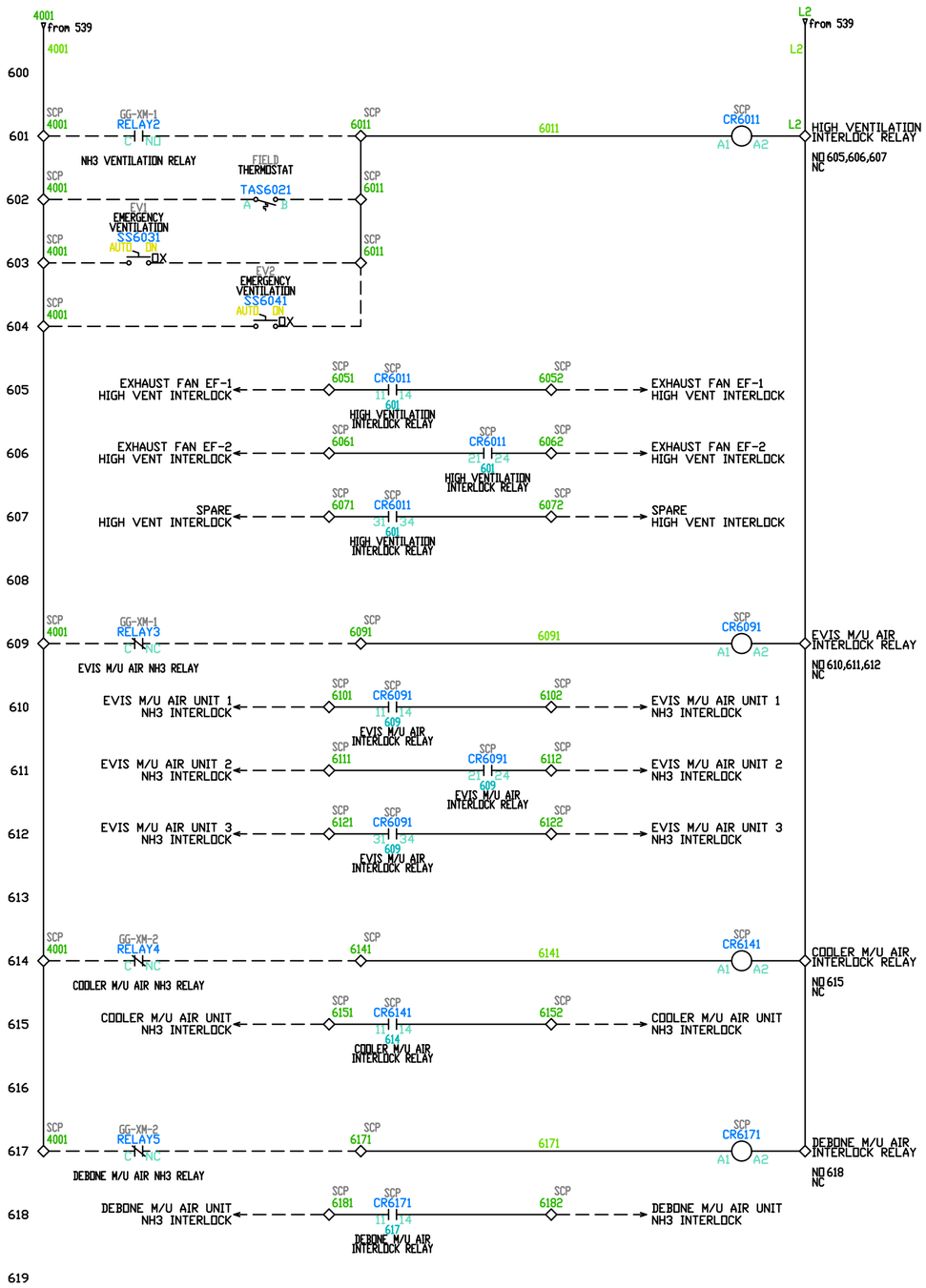

CAD DWG FILE RC-6.DWG

Uni-Temp
4483 S. Old Peachtree Rd.
Norcross, GA 30071
Phone: 800.227.3617
Fax : 770.242.9894
www.unitempref.com

Client: WAYNE FARMS

Project: REFRIGERATION SYSTEM SAFETY CONTROL PANEL
WAYNE FARMS
UNION SPRINGS, AL

Rev	Date	By:	Apprv:	Drawing Revision Description:
1	03/12/19	GG		PRELIMINARY - FOR REVIEW ONLY
2	03/19/19	GG		FOR CONSTRUCTION
3	04/10/19	GG		FOR INSTALLATION
4	08/27/19	GG		CORRECTIONS DURING INSTALLATION
5	10/18/19	GG		AS INSTALLED

THIS DOCUMENT CONTAINING PROPRIETY INFORMATION BELONGING TO UNI-TEMP REFRIGERATION INC. OR ITS AFFILIATED COMPANIES AND SHALL BE USED ONLY FOR THE PURPOSE FOR WHICH IT WAS SUPPLIED. IT SHALL NOT BE COPIED, REPRODUCED OR OTHERWISE USED, NOR SUCH INFORMATION BE FURNISHED IN WHOLE OR IN PART TO OTHERS EXCEPT IN ACCORDANCE WITH THE TERMS OF ANY AGREEMENT UNDER WHICH IT WAS SUPPLIED OR WITH PRIOR WRITTEN CONSENT OF UNI-TEMP REFRIGERATION INC. AND SHALL BE RETURNED UPON REQUEST.

Project No.: 3807
Drawn by: G Garrett
Dwg Date: 03/12/19
Prog. Engr.: J Howell
Scale: NONE
Sheet No.: 6 OF 9
Sheet Title: Ventilation Interlock Wiring
Sheet Name: RC-6

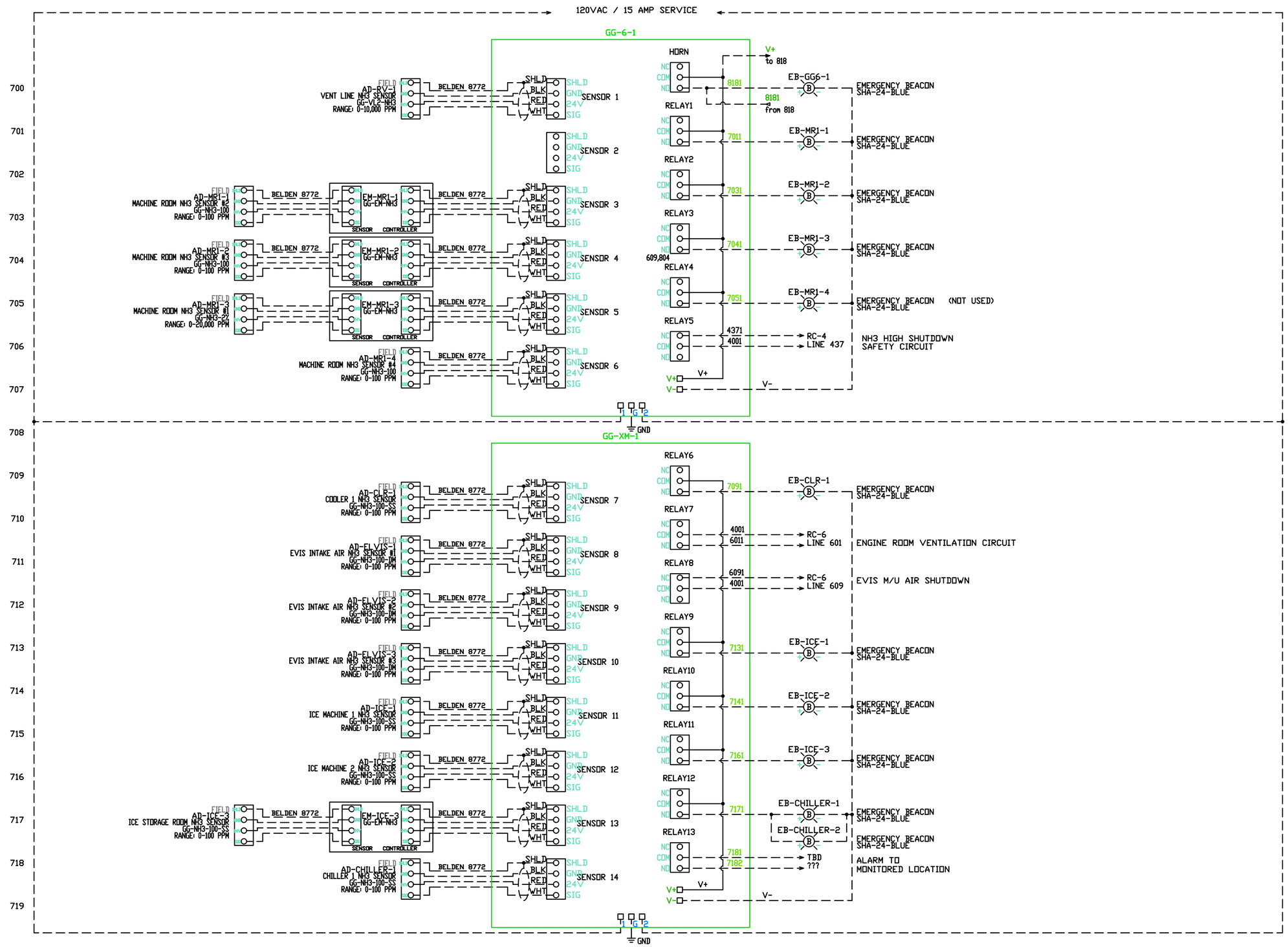

Uni-Temp
4483 S. Old Peachtree Rd.
Norcross, GA 30071
Phone: 800.227.3617
Fax : 770.242.9894
www.unitempref.com

Client: WAYNE FARMS

Project: REFRIGERATION SYSTEM SAFETY CONTROL PANEL
WAYNE FARMS
UNION SPRINGS, AL

Rev	Date	By:	Apprv:	Drawing Revision Description:
1	03/12/19	GG		PRELIMINARY - FOR REVIEW ONLY
2	03/19/19	GG		FOR CONSTRUCTION
3	04/10/19	GG		FOR INSTALLATION
4	08/27/19	GG		CORRECTIONS DURING INSTALLATION
5	10/18/19	GG		AS INSTALLED

THIS DOCUMENT CONTAINING PROPRIETY INFORMATION BELONGING TO UNI-TEMP REFRIGERATION INC. OR ITS AFFILIATED COMPANIES AND SHALL BE USED ONLY FOR THE PURPOSE FOR WHICH IT WAS SUPPLIED. IT SHALL NOT BE COPIED, REPRODUCED OR OTHERWISE USED, NOR SUCH INFORMATION BE FURNISHED IN WHOLE OR IN PART TO OTHERS EXCEPT IN ACCORDANCE WITH THE TERMS OF ANY AGREEMENT UNDER WHICH IT WAS SUPPLIED OR WITH PRIOR WRITTEN CONSENT OF UNI-TEMP REFRIGERATION INC. AND SHALL BE RETURNED UPON REQUEST.

Project No.: 3807
Drawn by: G Garrett
Dwg Date: 03/12/19
Prog. Engr.: J Howell
Scale: NONE
Sheet No.: 7 OF 9
Sheet Title: Ammonia Monitoring Station
Sheet Name: RC-7

CAD DWG FILE RC-7.DWG

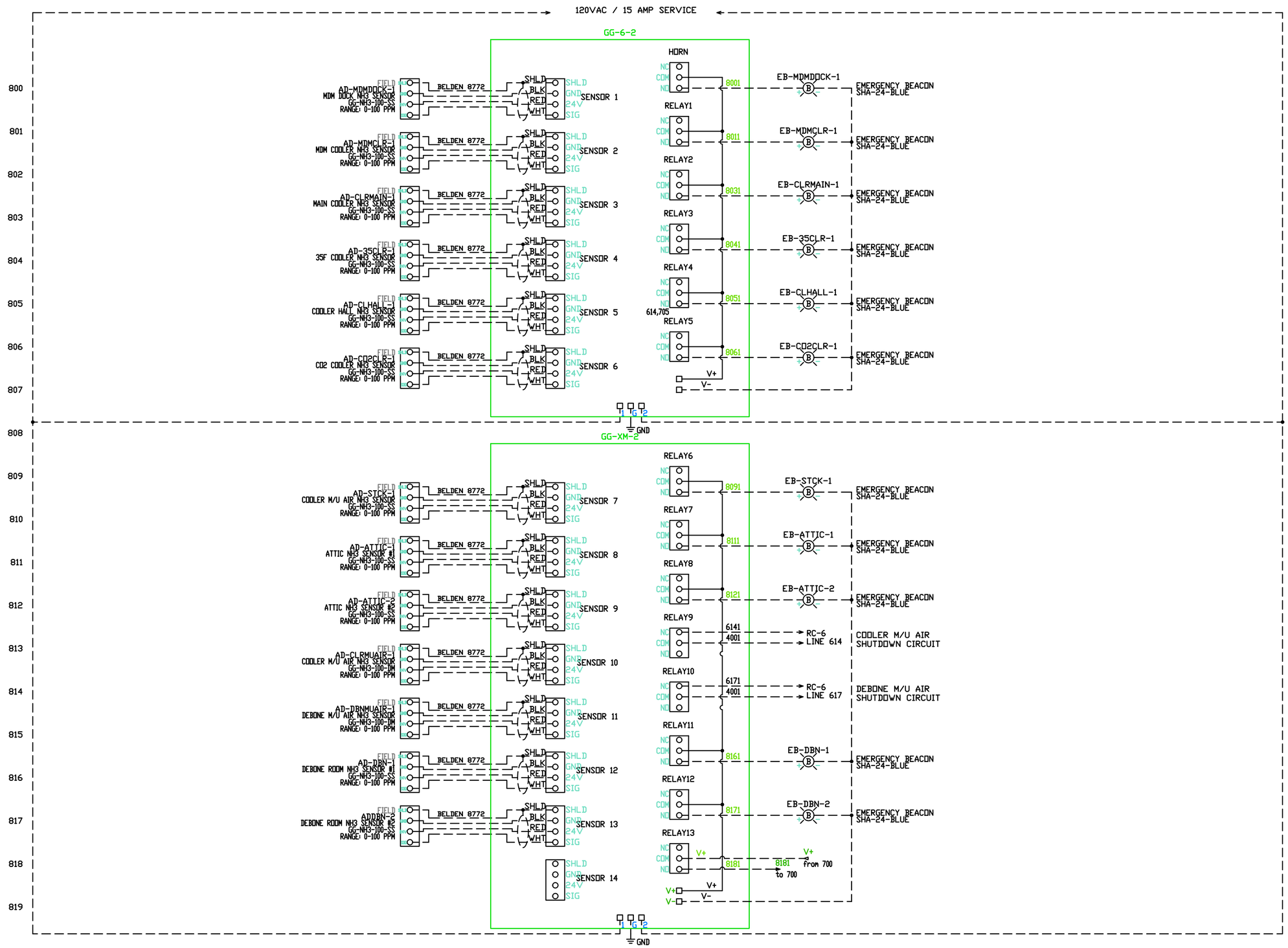

Uni-Temp
REFRIGERATION, INC.
4483 S. Old Peachtree Rd.
Norcross, GA 30071
Phone: 800.227.3617
Fax : 770.242.9894
www.unitempref.com

Client:

WAYNE FARMS

Project:

REFRIGERATION SYSTEM SAFETY CONTROL PANEL

WAYNE FARMS
UNION SPRINGS, AL

Rev	Date	By:	Apprv:	Drawing Revision Description:
1	03/12/19	GG		PRELIMINARY - FOR REVIEW ONLY
2	03/19/19	GG		FOR CONSTRUCTION
3	04/10/19	GG		FOR INSTALLATION
4	08/27/19	GG		CORRECTIONS DURING INSTALLATION
5	10/18/19	GG		AS INSTALLED

THIS DOCUMENT CONTAINING PROPRIETY INFORMATION BELONGING TO UNI-TEMP REFRIGERATION INC. OR ITS AFFILIATED COMPANIES AND SHALL BE USED ONLY FOR THE PURPOSE FOR WHICH IT WAS SUPPLIED. IT SHALL NOT BE COPIED, REPRODUCED OR OTHERWISE USED, NOR SUCH INFORMATION BE FURNISHED IN WHOLE OR IN PART TO OTHERS EXCEPT IN ACCORDANCE WITH THE TERMS OF ANY AGREEMENT UNDER WHICH IT WAS SUPPLIED OR WITH PRIOR WRITTEN CONSENT OF UNI-TEMP REFRIGERATION INC. AND SHALL BE RETURNED UPON REQUEST.

Project No.: 3807

Drawn by: G Garrett

Dwg Date: 03/12/19

Prog. Engr.: J Howell

Scale: NONE

Sheet No.: 8 OF 9

Sheet Title: Ammonia Monitoring Station

Sheet Name: RC-8

CAD DWG FILE RC-8.DWG

900	920
901	921
902	922
903	923
904	924
905	925
906	926
907	927
908	928
909	929
910	930
911	931
912	932
913	933
914	934
915	935
916	936
917	937
918	938
919	939

CAD DWG FILE RC-9.DWG

Uni-Temp
REFRIGERATION, INC.
4487 S. Old Peachtree Rd.
Norcross, GA 30071
Phone: 800.227.3617
Fax : 770.242.9894
www.unitempref.com

Client:

WAYNE FARMS

Project:

REFRIGERATION SYSTEM
SAFETY CONTROL PANEL
WAYNE FARMS
UNION SPRINGS, AL

Rev	Date	By:	Apprv:	Drawing Revision Description:
1	03/12/19	GG		PRELIMINARY - FOR REVIEW ONLY
2	03/19/19	GG		FOR CONSTRUCTION
3	04/10/19	GG		FOR INSTALLATION
4	08/27/19	GG		CORRECTIONS DURING INSTALLATION
5	10/18/19	GG		AS INSTALLED

THIS DOCUMENT CONTAINING PROPRIETY INFORMATION BELONGING TO UNI-TEMP REFRIGERATION INC. OR ITS AFFILIATED COMPANIES AND SHALL BE USED ONLY FOR THE PURPOSE FOR WHICH IT WAS SUPPLIED. IT SHALL NOT BE COPIED, REPRODUCED OR OTHERWISE USED, NOR SUCH INFORMATION BE FURNISHED IN WHOLE OR IN PART TO OTHERS EXCEPT IN ACCORDANCE WITH THE TERMS OF ANY AGREEMENT UNDER WHICH IT WAS SUPPLIED OR WITH PRIOR WRITTEN CONSENT OF UNI-TEMP REFRIGERATION INC. AND SHALL BE RETURNED UPON REQUEST.

Project No.: 3807

Drawn by: G Garrett

Dwg Date: 03/12/19

Prog. Engr.: J Howell

Scale: NONE

Sheet No.: 9 OF 9

Sheet Title: RC-9

Sheet Name: RC-9